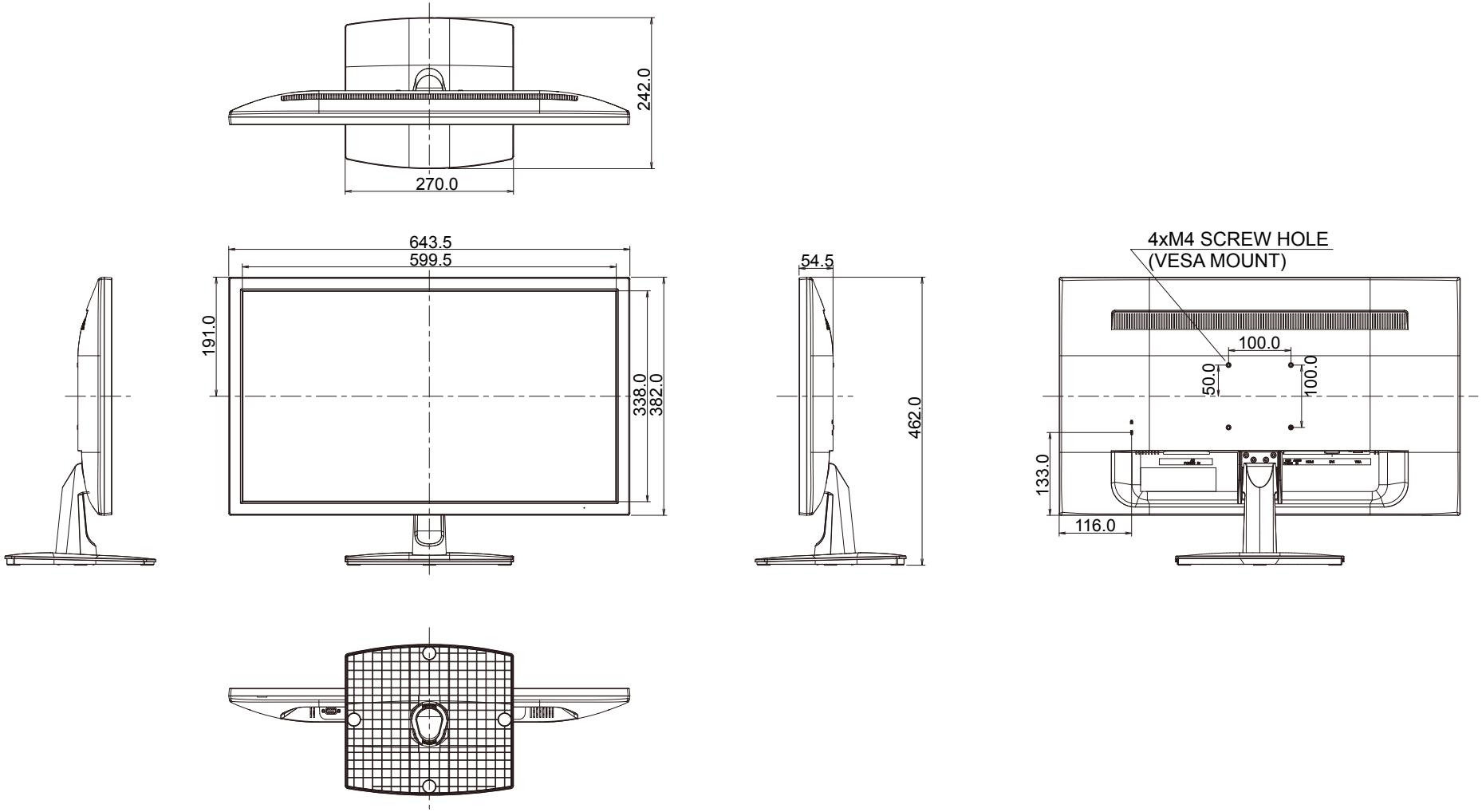
242.0
270.0
643.5
599.5
191.0
338.0
382.0
54.5
462.0
4xM4 SCREW HOLE
(VESA MOUNT)
100.0
50.0
100.0
133.0
116.0